LIGHTSHAPES

MLS2-MC SERIES

CORNER MODULES – SUSPENDED OR SURFACE MOUNT

Architectural Linear LED Illuminating System | LIGHTSHAPES 2

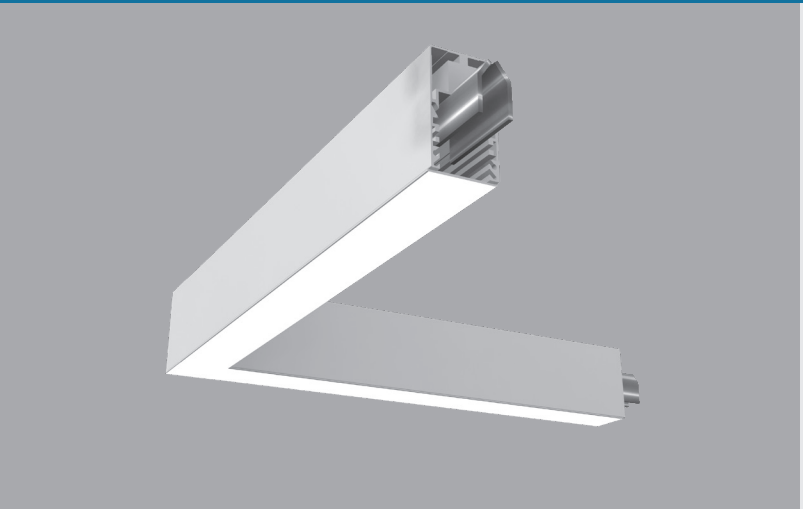

Features

- Fully illuminated 90-degree corner modules.
- Connects with linear series to enable lines of light to turn and continue.
- Extruded aluminum housings and a mitered corner for a perfectly constructed corner of light.
- Narrow profile: 1-7/8-inch width.
- Standard corners measure 23.5" X 23.5". Other dimensions on request.
- Custom formulated high diffusion extruded acrylic lenses, mitered at the corner.
- Non-glare matte-white polyester powder coating finish.
- Cable mount from ceiling or direct surface mount.
- Cataloged standard or custom set lumens-per-foot performances.
- 80 CRI standard. 90 CRI available.
- Dimming down to 1% on 0-10V controls.
- Fixture lumens per watt ratios up to 101.
- Lighting controls and sensors.
- Custom sizes and other angles available.
- American Made

Made in USA

Cross Section (actual size)

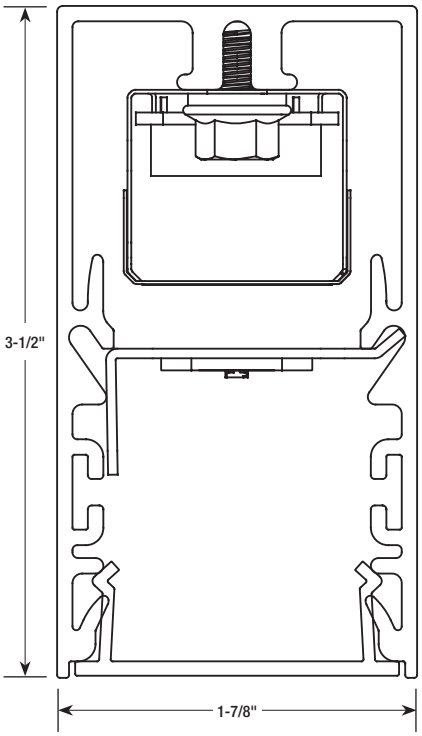

Performance

Based on 4Ft. Module, 3500K, 80 CRI, HTA diffuser

Lumens per Foot (LF)	Delivered Lumens (L)	System Watts (W)	Lumens per Watt (LPW)
400	1600	15.8	101.2
500	2000	20.2	99.0
625	2500	26.1	95.9
825	3300	36.2	91.3
900	3603	40.0	90.0

Actual performance may differ by +/- 5% when operating between 120V-277V +/- 10%.
Consult Factory for 90 CRI performances.

Multiplier for other Color Temp (K)

3000K	97%
3500K	100%
4000K	102%
5000K	103%

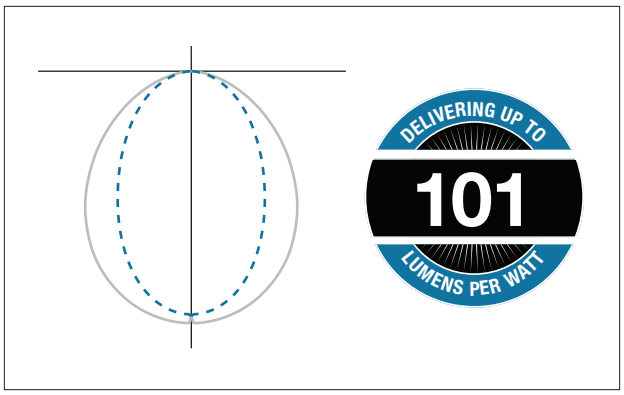

MERCURY ARCHITECTURAL LIGHTING

fixture type:

job information:

Mercury Lighting Products Co, Inc. | 20 Audrey Place | Fairfield, NJ 07004 | Tel: 800.637.2584 | Fax: 973.244.9522 | mercltg.com

Specifications subject to change, consult factory when critical.

Ex: MLS2-MC-90-825-35K-HTA-1%-U-S5

MLS2 - - - - - - - - Options: - - -

Series	Mounting	Corner Description	Lumens/Ft	Color Temp	Diffuser	Driver	Voltage	Lighting Controls	Custom Hanging Points	Custom Paint Colors	Misc.
MLS2 LightShapes 2	**MC** Corner Suspended Mount **MC1** Corner Surface Mount	**90** 90 Degree 23.5" X 23.5" Length **45** 45 Degree 23.5" X 23.5" Length	HTA: **400** **500** **625** **825** **900**	80 CRI: **30K** **35K** **40K** **50K** Upon Request	**HTA** High Transmission Acrylic **ASO** Acrylic Smooth Opal (Performance is reduced with this diffuser)	**1%** 0-10V 1% Dimming **SR** Sensor Ready (Required for Certain Controls, Contact Factory) **LDE1** Lutron Hi-Lume **LDE5** Lutron 5-Series	**U** Uni 120V-277V **1** 120V **7** 277V	**S1** Philips EasySense **S2** Magnum M9 (Dali) **S5** Enlighted (C2-D2)	As Specified	As Specified	**WL** UL "Suitable for Wet Locations" labeled.
		____ On Request Other Angles or Dimensions.	____ Custom Lumen Packages. Lumen Packages with ASO diffuser. Contact Factory.	90 CRI: **927K** **930K** **935K** **940K**		____ As Specified	**X** As Specified	____ No Option			

Housings

Extruded aluminum profile in a 0.080-inch wall thickness.

Computer-controlled cutting and TIG welding for a zero-tolerance mitered corner.

A one-piece 14GA galvanized steel joiner/aligner bracket is also provided for the corner.

Internal cold-rolled steel components.

Standard or custom hanging points are provided.

A custom formulated non-glare matte-white polyester powder coating provides an extremely durable and long lasting finish.

Custom color finishes on request.

Diffusers

Seamless fit diffusers. Flawless and consistent end-to-end fit.

Standard diffuser: extruded from custom formulated high transmission white acrylic material. Allows maximum light transmission while eliminating pixilation and hot spots.

Optional diffuser: extruded from acrylic smooth opal material. Offers a more esthetically white appearance. Note: reduces performance by up to 25%.

Smooth finish on both diffusers compliments the architectural elements.

LED Modules

High performance linear configured LED module boards.

Each board consists of multiple mid-power, high efficacy LEDs in a precise layout eliminating the need for supplemental heat sinking.

The boards produce an even and diffuse light which maximizes optical efficiency.

Compatible with the dimming performance of the LED driver.

Color temperatures available 80 CRI: 3000K, 3500K and 4000K. Upon request: 5000K.

Color temperatures available 90 CRI: 2700K, 3000K, 3500K and 4000K.

LED Drivers

Factory programmable constant current LED power supply.

Multiple standard drive current outputs (factory set by Mercury) are cataloged with their corresponding lumens-per-foot offering. Upon request, custom drive current outputs and lumens-per-foot options are available.

Note: Certain cataloged lumens-per-foot offerings may be provided with a non-programmable constant current LED power supply at Mercury's discretion. Contact factory if critical.

Universal voltage input, 120V-277V, 50HZ-60HZ.

Specification grade dimming down to 1% on 0-10V dimming controls.

Sensor ready (SR) drivers compatible with most lighting controls are optional. Consult factory.

Lutron drivers available: LDE1 and LDE5 series.

Integral Lighting Controls

Various lighting controls and sensors are optional. Consult factory.

Installations

Corner module designed to fit between two linear luminaires.

Designed to be suspended on cables. Specify **MC**

For direct surface mounting to most ceiling types, specify **MC1** and consult factory.

Will include appropriate job required quick-connect plug-thru wire harness and housing joiners.

Standard or custom hanging points will be provided per job specifications.

Certificate of Safety Compliance and Listings

Luminaire: UL and CUL listed 1598 and bears their label. Suitable for damp locations.

Optional: Suitable for wet locations marking is available. Some limitations apply. Contact factory for all details.

Warranty

5-year limited warranty is standard. Special 10-year warranty available on a job-to-job basis. Complete LED warranty terms available at www.mercltg.com.

Actual performance may differ as a result of end-user environment and application.

Most LED luminaires are suitable to operate in ambient temperatures from -20C (-4F) to 25C (77F).

The following exclusions apply: Luminaires with optional standby lighting option, integral lighting controls options, or wireless control options. Consult factory.

LM-79 testing was measured under a controlled 25C (77F) ambient operating temperature.

Hanging Accessories

Part #	Description
R5PF-100	Round 5" power feed canopy, Hanging hardware, 100" long 1/16" cable.
R5-100	Round 5" canopy, Hanging hardware, 100" long 1/16" cable.
R2-100	Round 2" canopy, Hanging hardware, 100" long 1/16" cable.
S5PF-100	Square 5" power feed canopy, Hanging hardware, 100" long 1/16" cable.
S5-100	Square 5" canopy, Hanging hardware, 100" long 1/16" cable.
S2-100	Square 2" canopy, Hanging hardware, 100" long 1/16" cable.

Other cable lengths available.

MERCURY ARCHITECTURAL LIGHTING

Dimensional Data

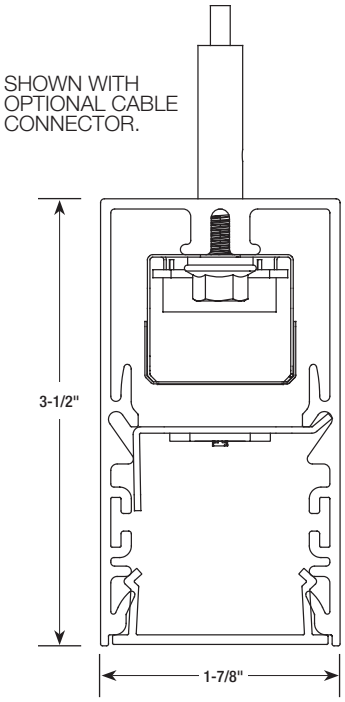

Mounting Information

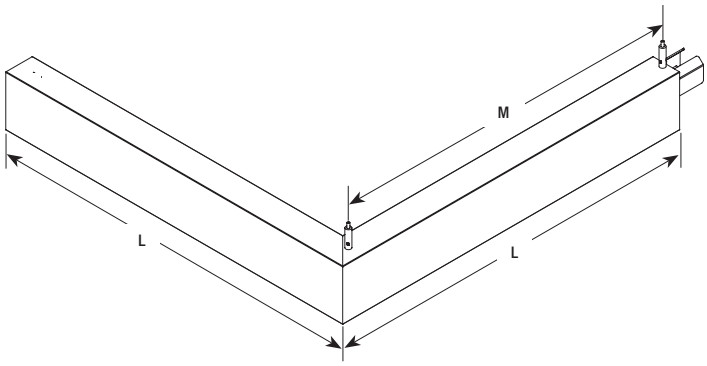

L	M
23.5"	22"
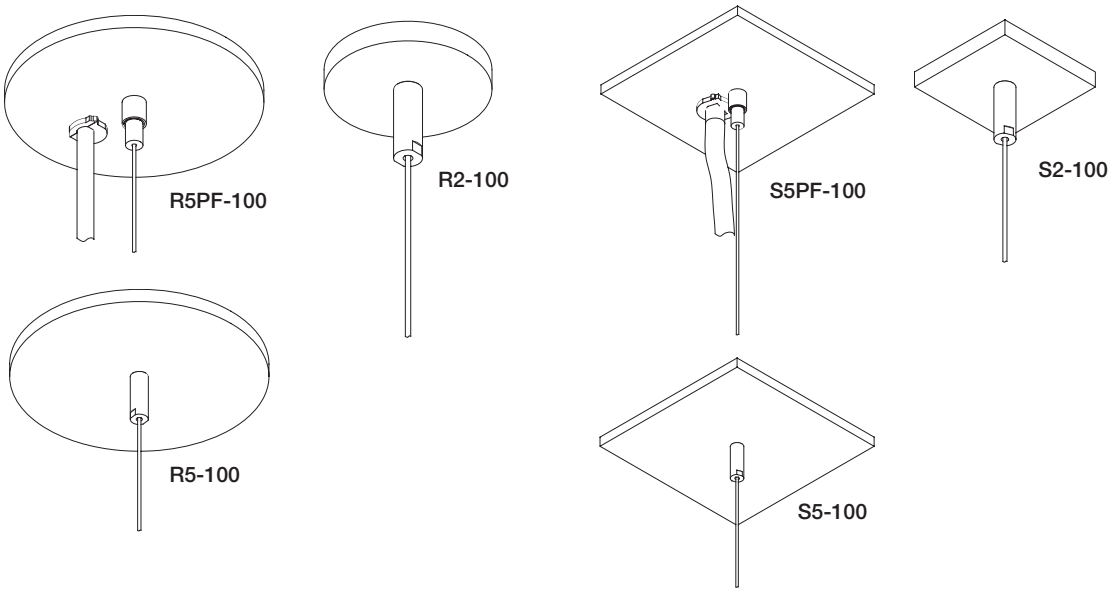
Hanging Accessories